■INSTALLATION

1. Install the sensor with its rear side as reference.
2. Install the sensor vertically with respect to the rotating surface. (90±5°)
3. Install the sensor in a location free from vibration.
4. Install the sensor in a place with no substantial variations in temperature.
5. When affixing the sensor rear surface with screws, use M3 machine screws, 5mm long.
   Tighten the screws to a torque of 4kgf • cm Max.

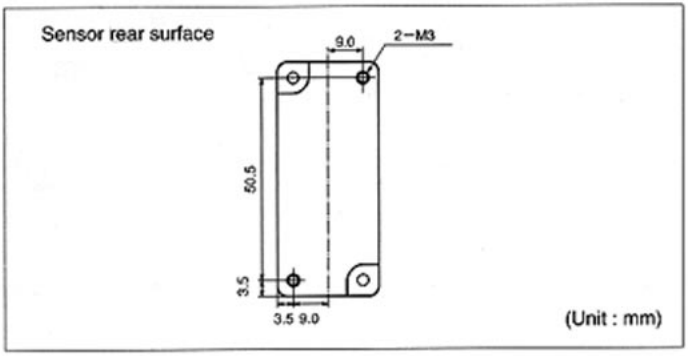

■APPLICATION

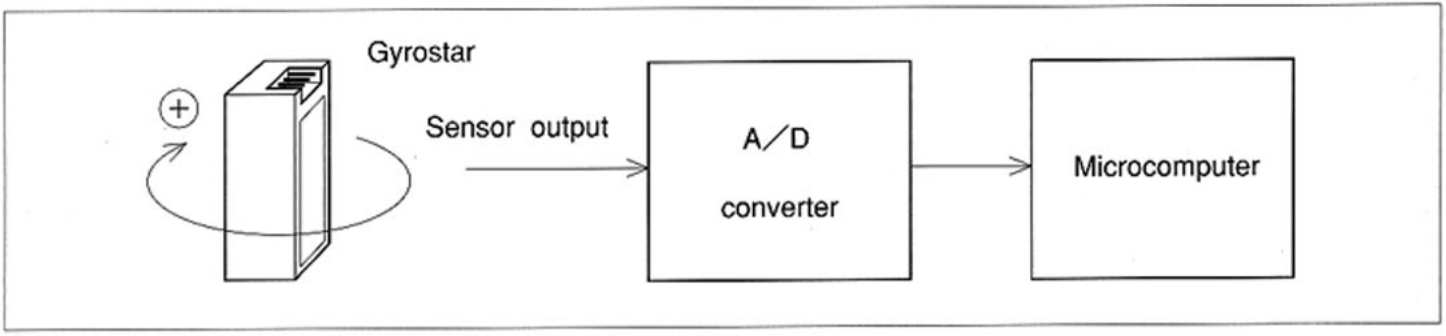

1. When high-precision measurement is required, as in a navigation system, use the output of this sensor through an A/D converter as shown above.
2. Positive voltage(+) and negative voltage(−) are obtained in the clockwise and counterclockwise directions, respectively, with the static output as a reference.
3. Always use an A/D converter of 12 bits or more.
4. The sampling frequency used for measurement should be 50 times/sec Min.
5. Use a sensor output load resistance of 22kΩ or more.