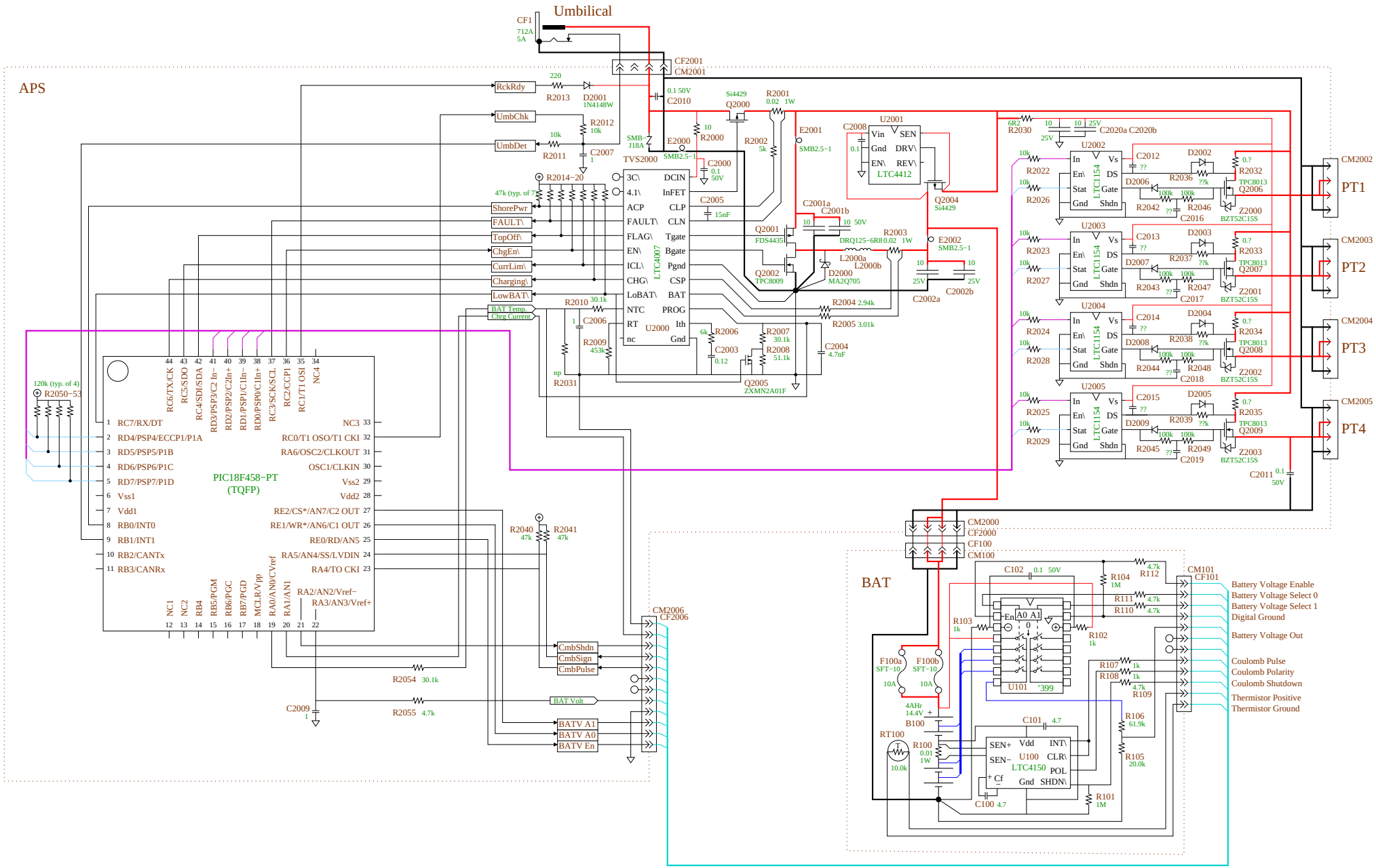
Umbilical
APS
BAT
PIC18F458−PT
(TQFP)
LTC4007
LTC4412
LTC1154
LTC4150
TVS2000
U2000
U2001
U2002
U2003
U2004
U2005
U101
U100
PT1
PT2
PT3
PT4
Battery Voltage Enable
Battery Voltage Select 0
Battery Voltage Select 1
Digital Ground
Battery Voltage Out
Coulomb Pulse
Coulomb Polarity
Coulomb Shutdown
Thermistor Positive
Thermistor Ground